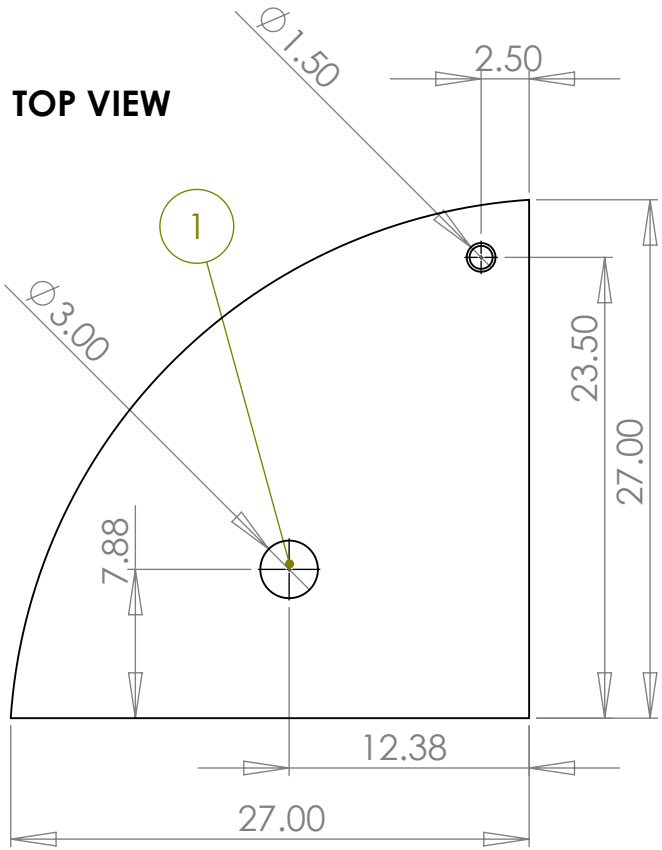

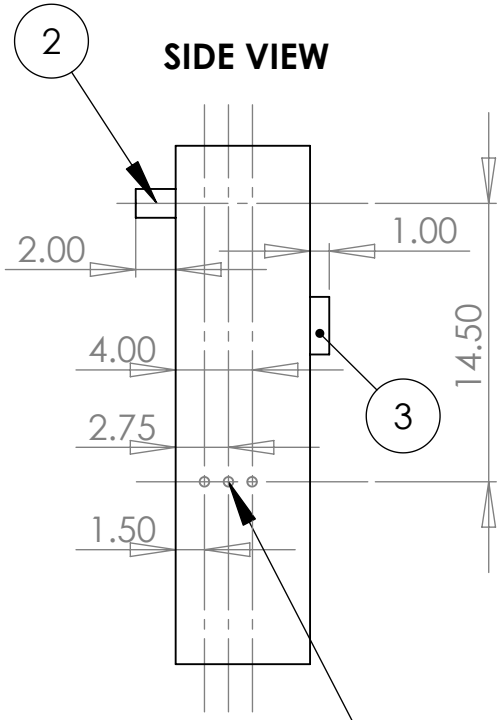

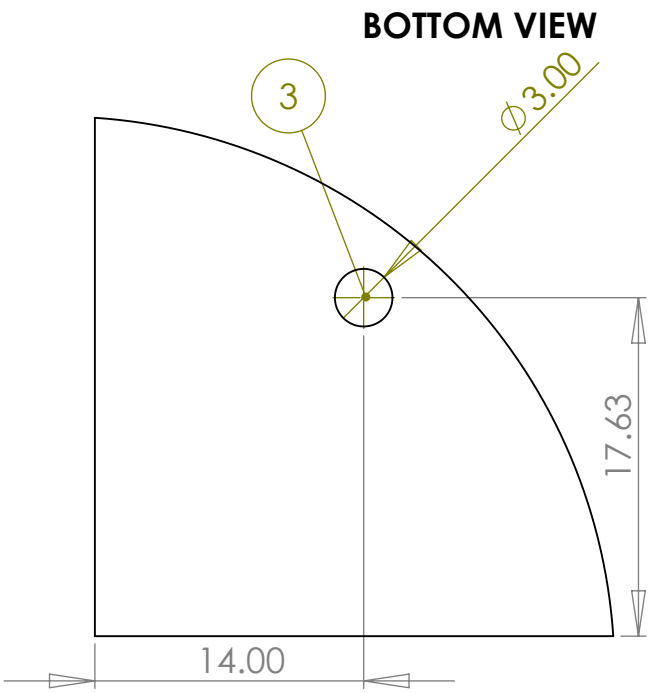

Locate 3 sensors here:

- Top sensor wire= Black
- Middle sensor wire = Brown
- Bottom sensor wire = Red

Note 1: Femal Pipe Thread

Note 2: Non-threaded

Note 3: Non-threaded to accommodate 3" slip-in, clamp-on type adaptor (Airstream PN: 030107) for the attachment of a Thetford dump valve.

PROPRIETARY AND CONFIDENTIAL

THE INFORMATION CONTAINED IN THIS DRAWING IS THE SOLE PROPERTY OF <INSERT COMPANY NAME HERE>. ANY REPRODUCTION IN PART OR AS A WHOLE WITHOUT THE WRITTEN PERMISSION OF <INSERT COMPANY NAME HERE> IS PROHIBITED.

NEXT ASSY	USED ON
APPLICATION	

UNLESS OTHERWISE SPECIFIED:

DIMENSIONS ARE IN INCHES
TOLERANCES:
FRACTIONAL ±
ANGULAR: MACH ± BEND ±
TWO PLACE DECIMAL ±
THREE PLACE DECIMAL ±

INTERPRET GEOMETRIC TOLERANCING PER:

MATERIAL

FINISH

DO NOT SCALE DRAWING

	NAME	DATE
DRAWN		
CHECKED		
ENG APPR.		
MFG APPR.		
Q.A.		

COMMENTS:

TITLE:

Waste Tank
72 Airstream Tradewind
3/4 Rear Bath

SIZE **A** DWG. NO. Waste Tank REV

SCALE: 1:10 WEIGHT: SHEET 1 OF 1

5 4 3 2 1